1st SUNFLOWER RENEWABLE ENERGY

Version 11.03

For our present, For their future.

SFA-HJ series Installation Manual

Thermosyphon Tubular Solar Water Heater

Contents

Please read the whole manuals carefully before assemble!

1. Solar water heater size and weight

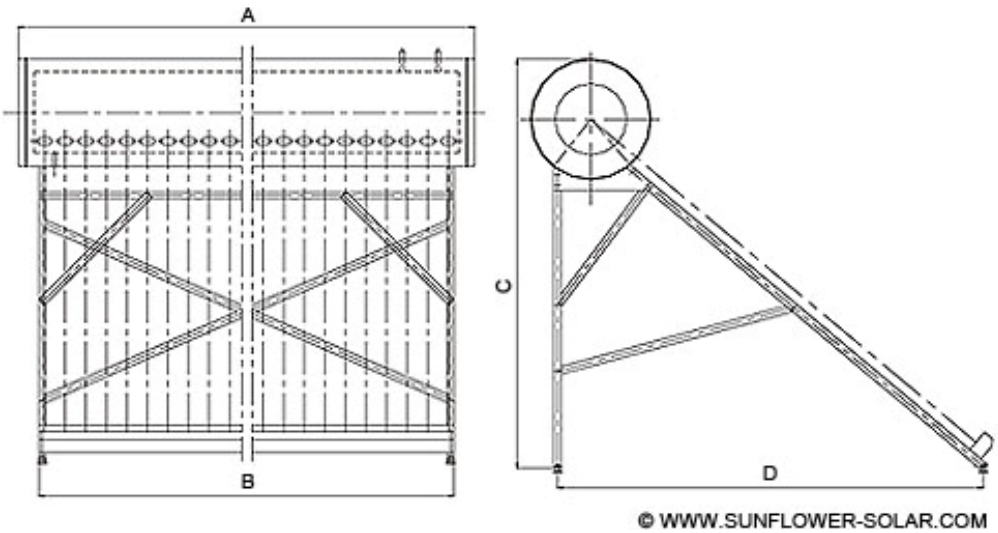

Item No.	Specification					Size(mm)			
	Diameter of water tank	Qty. of solar tubes	Diameter of solar tube	Length of solar tube	Weight	A	B	C	D
SFA42154715-HJ	Ø 420mm	15pcs	Ø 47mm	1.5M	48KG	1170	1060	1307	1346
SFA42184715-HJ	Ø 420mm	18pcs	Ø 47mm	1.5M	54KG	1380	1270	1307	1346
SFA42204715-HJ	Ø 420mm	20pcs	Ø 47mm	1.5M	59KG	1520	1410	1307	1346
SFA42244715-HJ	Ø 420mm	24pcs	Ø 47mm	1.5M	71KG	1800	1690	1307	1346
SFA42304715-HJ	Ø 420mm	30pcs	Ø 47mm	1.5M	87KG	2220	2110	1307	1346
SFA47155818-HJ	Ø 470mm	15pcs	Ø 58mm	1.8M	63KG	1348	1228	1594	1655
SFA47185818-HJ	Ø 470mm	18pcs	Ø 58mm	1.8M	74KG	1591	1471	1594	1655
SFA47205818-HJ	Ø 470mm	20pcs	Ø 58mm	1.8M	84KG	1753	1633	1594	1655
SFA47245818-HJ	Ø 470mm	24pcs	Ø 58mm	1.8M	99KG	2077	1957	1594	1655
SFA47305818-HJ	Ø 470mm	30pcs	Ø 58mm	1.8M	118KG	2563	2443	1594	1655

Fig 1.1

2. How to transport and carry it

Please carry the tank horizontally. It's forbidden to carry it vertically.
Please carry the glass tubes carefully and horizontally. It's forbidden to carry them vertically.

If you want to transport your solar water heaters a long distance, it's better to put the tank on the bottom and make sure it won't move during transportation. To save space, you can put the tube carton on the tank carton, and do your best to drive carefully, avoiding bumpy road.

3. Installation

Installation sequence:

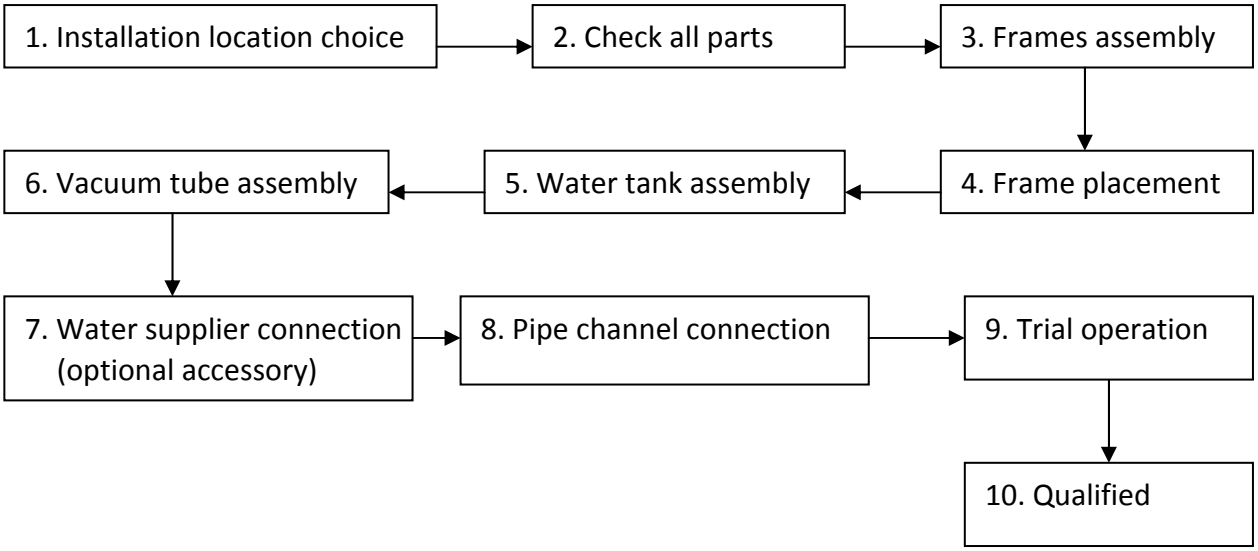

3.1 Installation location choice

The choices of solar water heater installation location have several principles as follows:
a) Solar water heater needs to face the Sun, make sure without any shadow in front;
b) Try to use shortest pipe connection, try to reduce the turning, no dead angle;
c) The installation location needs to bear the gravity of solar water heater, stable placement;
d) Easy installation and maintenance.

3.2 Unpack and inspection

No.	Name	Total quantity									
		SFA42*4715-HJ					SFA42*5818-HJ				
		15	18	20	24	30	15	18	20	24	30
1	Water tank	1	1	1	1	1	1	1	1	1	1
2	Gantry	2	2	2	3	3	2	2	2	3	3
3	Decoration ring	15+1	18+1	20+1	24+1	30+1	15+1	18+1	20+1	24+1	30+1
4	Silicon ring	+1	+1	+1	+1	+1	+1	+1	+1	+1	+1
5	Tube caps	15+1	18+1	20+1	24+1	30+1	15+1	18+1	20+1	24+1	30+1
6	Diagonal-leg	2	2	2	3	3	2	2	2	3	3
7	Stand bar	2	2	2	3	3	2	2	2	3	3
8	Tube holder	1	1	1	1	1	1	1	1	1	1
9	Long diagonal brace	2	2	2	3	3	2	2	2	3	3
10	Cross-bar	3	3	3	3	3	3	3	3	3	3
11	Front Cross brace	2	2	2	4	4	2	2	2	4	4
12	Back Cross brace	2	2	2	2	2	2	2	2	2	2
13	Screw	1 PKG	1 PKG	1 PKG	1 PKG	1 PKG	1 PKG	1 PKG	1 PKG	1 PKG	1 PKG
14	Vacuum Tube	15	18	20	24	30	15	18	20	24	30

Note: In above form, the number after "+" means the quantity of extra free compensation parts.

3.3 Fix the Frames and Tank

3.3.1 Steps of Assembly

Steps 1: Gantry Assembly.

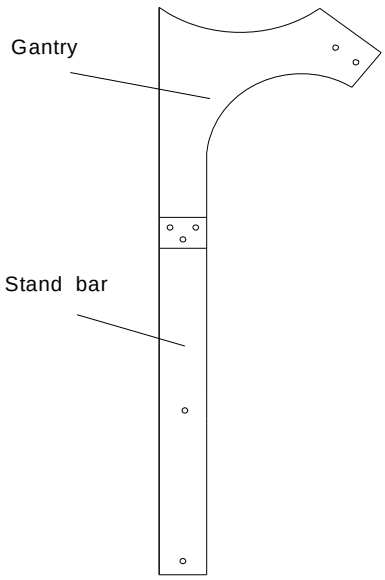

Fig 3.1

Steps 2: Diagonal-leg Assembly.

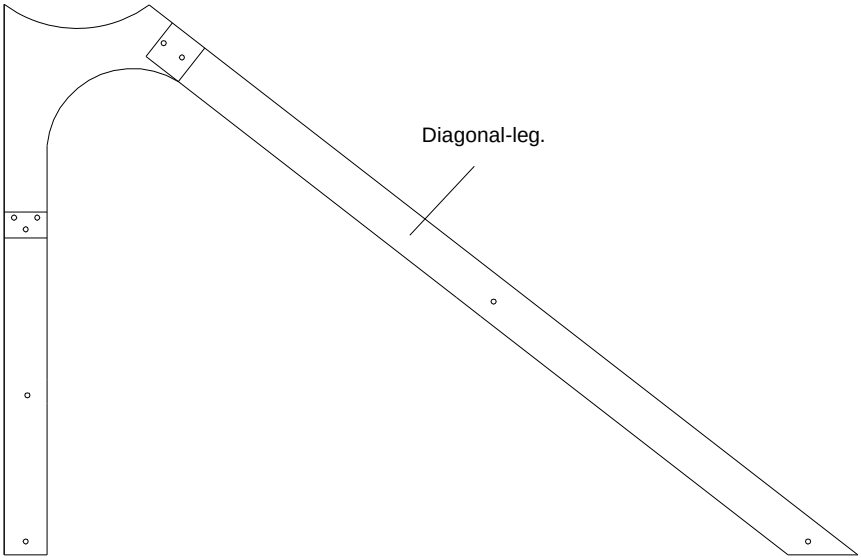

Fig 3.2

Steps 3: Long diagonal brace Assembly.

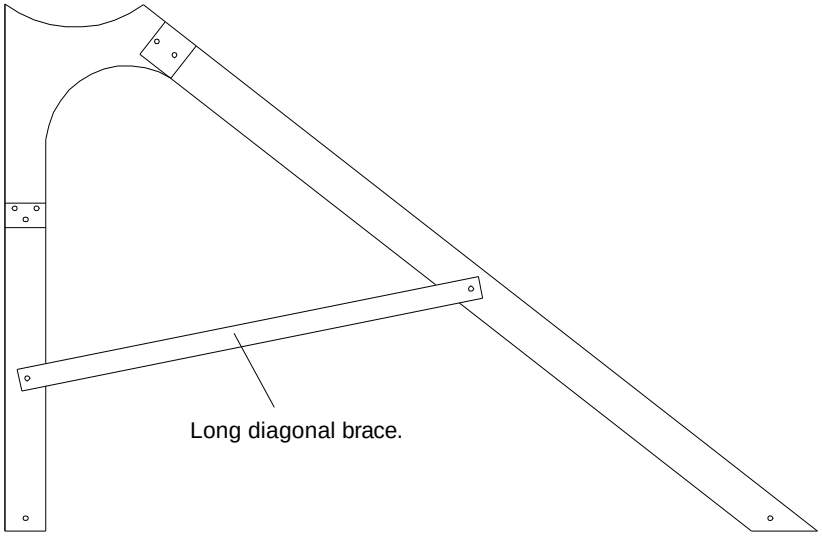

Fig 3.3

Steps 4: Assembly other short frame parts (3 Cross-bars and 6 Cross braces assembly), the finally installation as follow:

Fig 3.4

3.3.2 Water Tank Assembly

Warning: Please confirm the connection of frames is tighten and the placement is stable first and then assembly the water tank.

Please check the water cylinder and make sure there is nothing inside of it. If there is, please try to take it out. Put the assembled frames on level ground, or install them in their final place of operation, e.g. on the ground or on a roof (If on roof, aerial work, please pay attention to safety). Remove the nuts from the screws at the end of water tank.

Then two workers hold onto the two ends of the tank, and put the tank onto the gantry carefully.

Please try to let the screws go through the long notch on the gantry. You may need to gently turn the cylinder to achieve it.

Then screw the nuts back onto the screws of the tank so that the tank can be fixed on the frame.

Note: "Do not tighten the bolts completely. Just make them snug. You may need to turn the tank so that the vacuum tubes line up with the bottom tube holders. Once the tubes are installed, then tighten the bolts completely so the tank is firmly connected to the stand."

Fig 3.5

3.4 All-glass vacuum tube Assembly

1) Put the Decoration ring on the opening part of the SFVA .Daub some lubricant referred in the above item on the opening part of the SFVA tube.

Fig 3.6

2) Insert SFVA into one of the water tank's holes for evacuated tubes.
Please make sure the opening part of the SFVA tube also insert into the Seal Silicon ring and it's easily to insert if in the way of going round and slowly.

Fig 3.7

3) After you insert the opening part of the SFVA tube into the holes of the water tank, put the end of the tube into the cupping of the frame and make sure the course is going slowly.

4)

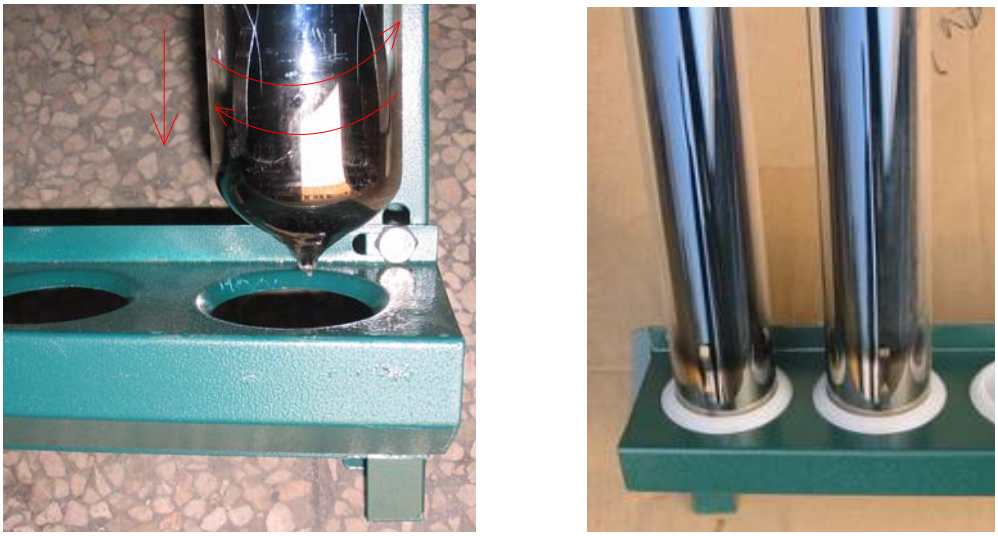

Fig 3.8

3.5 Fix solar water supplier (optional accessory)

3.5.1 The diagram of the connectors of water supplier

.

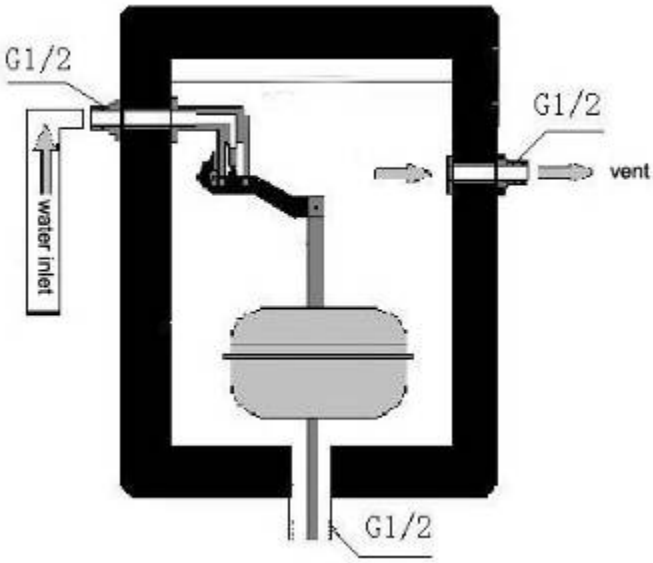

Fig 3.9

3.5.2 Water Supplier Assembly (optional accessory)

The connector on the bottom of water supplier is connected to the right connector on the water tank of solar water heater.

The air vent (the left connector) need to be connected with a long pipe, and the length of pipe must higher than the top position of water supplier. The air vent needs to be open all the time.

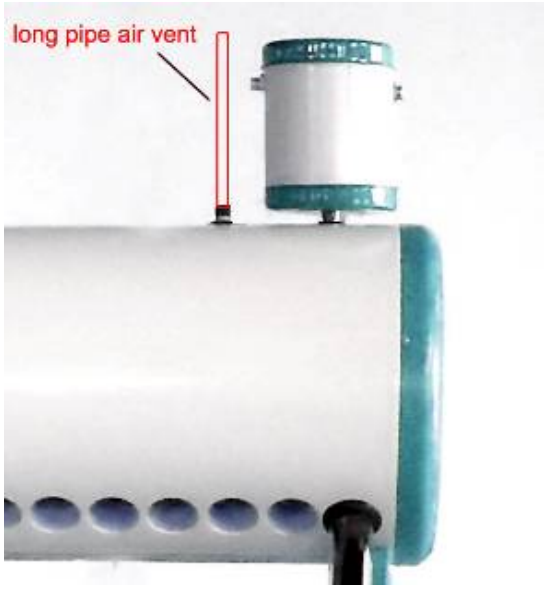

Fig 3.10

3.6 The water inlet and water outlet pipe channel connection of solar water heater

3.6.1 Piping diagram for system

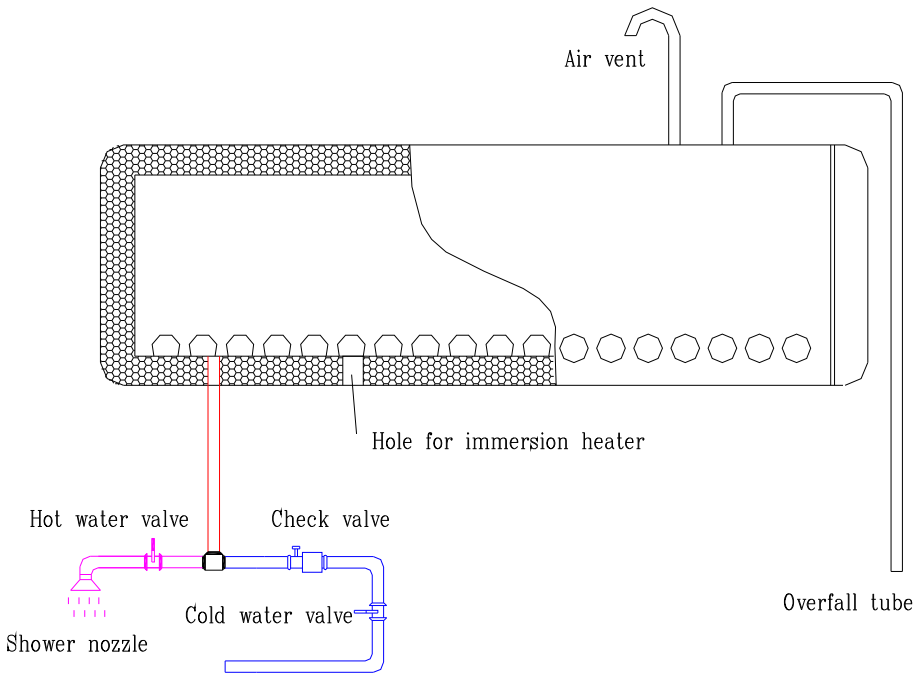

Fig 3.11

3.6.2 Piping diagram for system with Water supplier (optional accessory)

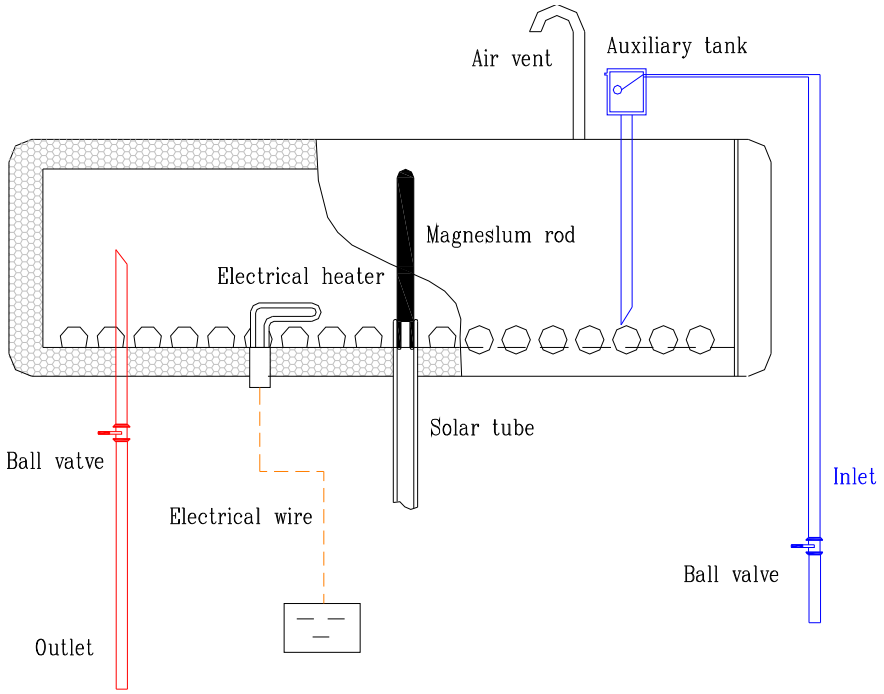

Fig 3.12

Warning: If you use electric heater, the person who install the electric heater must have electrician qualification. And you need to use electricity leakage protection plug and should connect with ground wire.

3.6.3 Piping diagram for system with Controller (optional accessory)

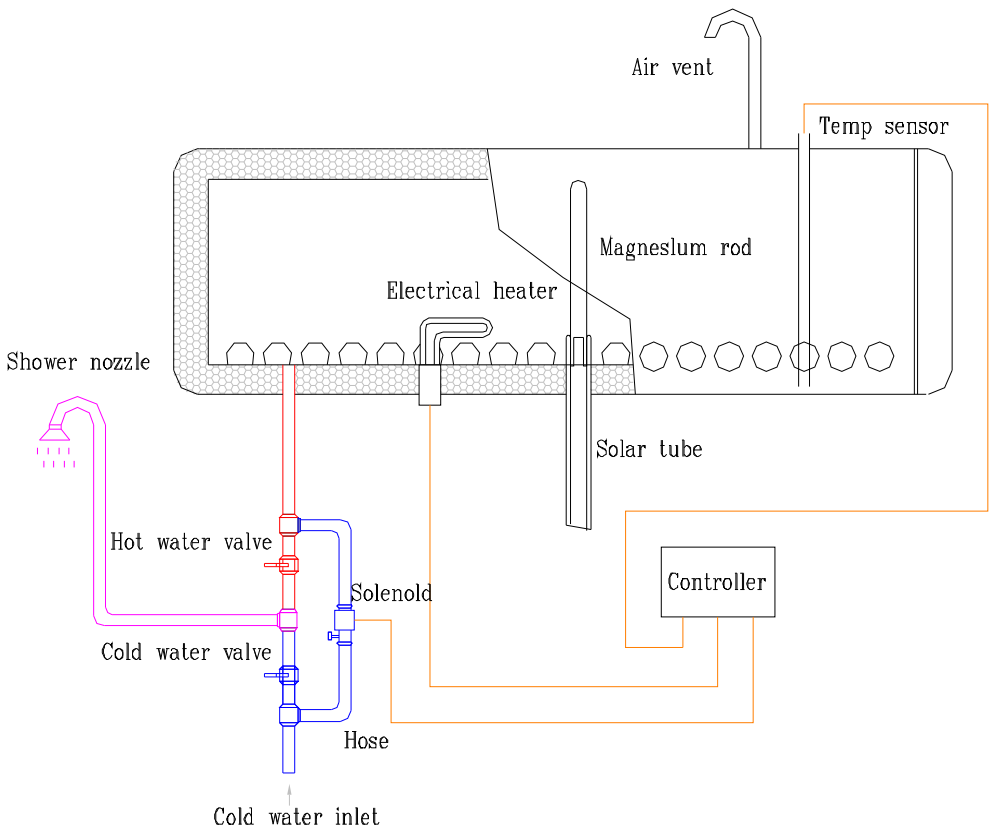

Fig 3.13

Note: If you use solar controller, please read the assembly manual of solar controller before you install the solar controller.

Warning:

1) When the sunlight is adequate during the installation, you could full fill the glass tube with water and then insert into the water tank, try to avoid thermal shock, it may lead to the broken of vacuum tube.
2) The air vent on the top of water tank needs to keep open. If adopt water supplier, please connect a long pipe to the air vent, and the height must higher than the top position of water supplier.
3) Please pay attention to the weight capacity of roof.
4) Aerial work, please pay attention to safety.

3.7 Trial operation and troubleshoot methods

3.7.1 Trial operation

First please confirm whether the vacuum tube is shined by sunlight without water inside, otherwise can't feed the cold water.

Suggestions: If the process has to be finished under sunshine, you can cover the inserted tubes by black cloth, etc.

3.7.2 Troubleshoot methods

Open the cold water inlet, check the pipe channel and connection between vacuum tube and water tank, if find any leakage, it should close the valve immediately, eliminate the leakage.

As for the leakage when insert the vacuum tube, there are normal four points as follow:

1) The broken of Silicon ring
2) There is adsorption bubble on the Silicon ring
3) Silicon ring is not connected with inner tank
4) Insert vacuum tubes without any lubricant

3.7.3 Check the air vent to make sure its fluency.

4. Lightning protection

The solar water heater should have lightning protection to avoid lightening damage. A lightning rod is necessary which should be 1.5m higher and 3 m farther away from the solar water heater. For any problems that involve plumbing or electrical connections the services of a qualified professional must be employed.

Warning: When in thunderstorm weather please don't use solar water heaters.

5. How to connect couple of collectors

We suggest you use the corrugated connection pipe to connect every two solar collectors, which is very convenient and completely fit two solar collectors. Please see the following picture.

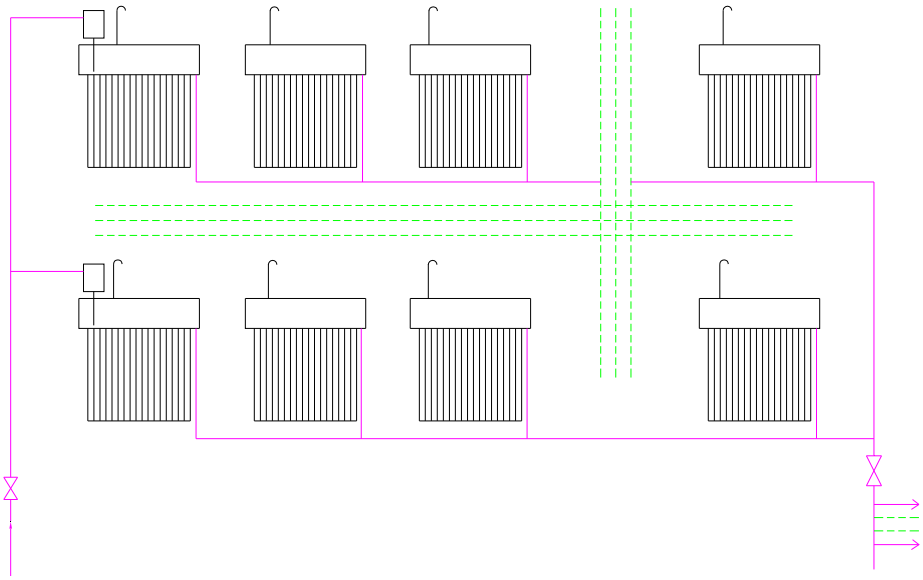

Fig 5.1

6. Dimensions of pipe connections

All size of the connectors on the solar water heaters are 1/2 inch.

7. Precautions

1) When installing your solar water heater in a cold climate where freezing is possible, please put an insulation layer around the pipes which are outside the building. You may want to add additional protection in the form of a thermostatically controlled heat tape.
2) If you use the optional electric immersion heater, the person who installs the electric heater must be a qualified electrician. You need to use an electricity leakage protection plug and everything should be grounded.

8. Max. working pressure

This type is non-pressurized type, but the solar water heater could bear the gravity of water inside.

9. Installation Angle

It is common for solar water heaters to be installed at an angle that is similar to the latitude of your location. Installing it with a tilt angle (as measured from horizontal) less than 20° is not recommended as the heat pipes

perform best in the range of 20-70 degrees. While adhering to this guideline, an angle of your latitude +/-10° is acceptable, and will not greatly reduce the solar heater output.

Angles out of this range can also be used, but a decrease of heat output will result. When the angle is lower than the latitude, it will increase summer output, while a higher angle will enhance winter output.

10. Wind and snow accumulation

When installing the solar water heater, please consider the issue of wind resistance and the resultant stress on the fixed points. The standard frame is designed to withstand wind speeds of up to 100km/h (62 mph) and 30cm (about 11.8 inches) of snow accumulation without damage. For areas with the possibility for high winds, additional reinforcement of attachment points (e.g. into roof rafters, or ground anchors) may be required and can easily be supplied by your local installers.

11. Maintenance Requirements

11.1 Cleaning

Regularly raining could keep the heat pipe vacuum tube clean, but if it is particularly dirty then it may need to be cleaned with a soft cloth and warm, soapy water or other glass cleaning solutions. If the tubes are not easily and safely accessible, a water spray from a garden hose may also be used.

11.2 Leaves

During autumn, leaves may accumulate between or under the tubes. Please remove these leaves regularly to ensure optimal performance and to prevent any fire hazard. (The solar water heater will not cause the ignition of flammable materials).

11.3 Broken Tube

When the vacuum tube is broken, please close the valve immediately, please open the valve after replace the vacuum tube, in order to save the water consumption. When replace the vacuum tubes, please follow the instructions in step **3.4.**